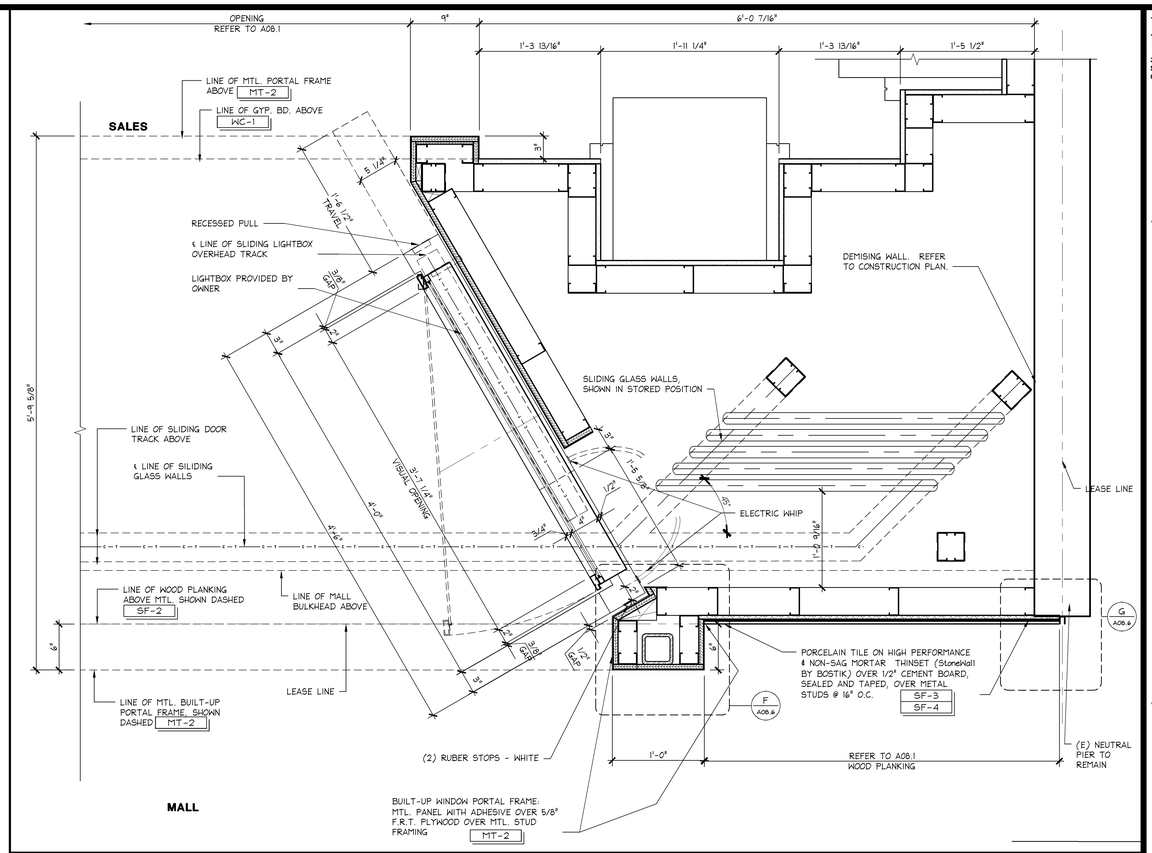


## ENLARGED PLAN STOREFRONT / LIGHTBOX

1 1/2" = 1'-0"

42D-A086-L02-DETL

C 07.22.09

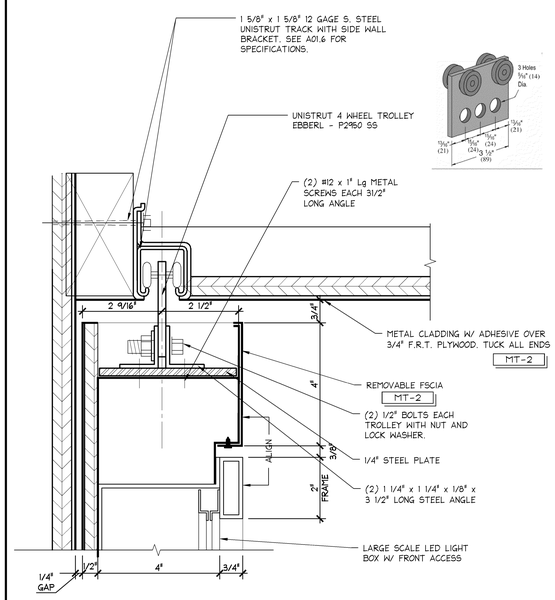


## LIGHT BOX HEAD DETAIL - METAL

6" = 1'-0"

42D-A086-B00-DETL

F 11.17.10

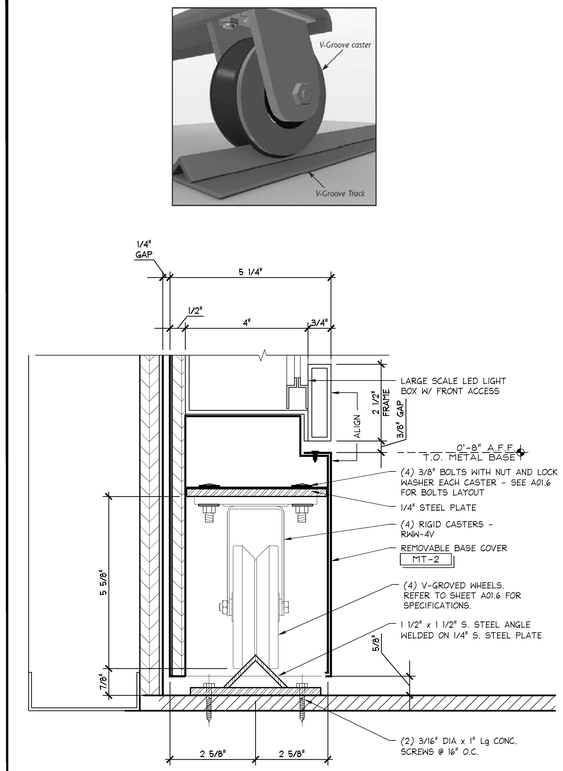


## LIGHT BOX SILL DETAIL - SLIDING

6" = 1'-0"

42D-A086-A02-DETL

A 11.17.10


MOODY•NOLAN
responsive architecture
300 Spruce Street Phone: (614) 461-4664
Suite 300 Fax: (614) 280-8881
Columbus, Ohio 43215 www.moodynolan.com


Limitedbrands
LIMITED STORE PLANNING, INC.
d/b/a STORE DESIGN & CONSTRUCTION
Three Limited Parkway · Columbus, Ohio 43230
Telephone: 614.415.7000 · Fax: 614.415.7349


PROHIBITION ON RUSE: THESE DRAWINGS AND SPECIFICATIONS WERE PREPARED FOR USE ON A SPECIFIC SITE CONTEMPORANEOUSLY WITH THEIR ISSUE DATE. THEY ARE NOT INTENDED FOR USE ON A DIFFERENT PROJECT SITE AT A LATER DATE OR ON ANOTHER PROJECT SITE AT ANY TIME. THE ARCHITECT DISCLAIMS REPRODUCTION THEREOF ON ANOTHER PROJECT IS PROHIBITED AND CONTRARY TO LAW UNLESS EXPRESSLY AUTHORIZED IN WRITING BY LIMITED STORE PLANNING, INC., D/B/A LIMITED STORE DESIGN AND CONSTRUCTION ("LSDC").

THESE DRAWINGS AND SPECIFICATIONS ARE THE PROPERTY OF LSDC AND SHALL NOT BE DISPLAYED IN ANY MANNER OR USED IN ANY OTHER PROJECT EXCEPT BY WRITTEN AGREEMENT WITH LSDC. NO REPRODUCTION OF THESE DRAWINGS AND SPECIFICATIONS MAY BE MADE WITHOUT WRITTEN AUTHORIZATION OF THE LSDC. ALL ORIGINALS OR REPRODUCTIONS OF THESE DRAWINGS AND SPECIFICATIONS MUST BE RETURNED TO LSDC UPON COMPLETION OF THE WORK ASSOCIATED WITH THEM.

COPYRIGHT NOTICE:
THESE DRAWINGS AND SPECIFICATIONS ARE COPYRIGHTED AND SUBJECT TO COPYRIGHT PROTECTION AS AN "ARCHITECTURAL WORK" UNDER SEC. 102 OF THE COPYRIGHT ACT, 17 U.S.C. AS AMENDED DECEMBER 1990. THIS PROTECTION INCLUDES, BUT IS NOT LIMITED TO, THE OVERALL FORM, ARRANGEMENT AND COMPOSITION OF SPACES, AND ELEMENTS OF DESIGN. THE OVERALL FORM, ARRANGEMENT AND COMPOSITION OF SPACES, AND ELEMENTS OF DESIGN INCLUDED, WITHOUT LIMITATION, THE OVERALL FORM, ARRANGEMENT AND COMPOSITION OF SPACES, AND ARCHITECTURAL FEATURES, DESIGNS, DETAILS, DIMENSIONS, ORNAMENTATION, LAYOUT, PROPORTIONS, SHAPES, DISPLAYS, FIXTURES, AND SIMILAR ELEMENTS INCLUDED IN THESE DRAWINGS AND SPECIFICATIONS MAY RESULT IN EXCUSION OF CONSTRUCTION, BUILDING SECURE, AND/OR MONETARY DAMAGES AWARDED BY THE LSDC.


024200396

PROJECT INFORMATION:

**BATH & BODY WORKS**
**MEMORIAL CITY MALL**
303 MEMORIAL CITY WAY
SUITE 733
HOUSTON, TX 77024

RELO DWN / NEW | PACKAGE: 1
EASTON-C | GENERATION: 1
60685 | A/E PROJECT #: 1415a
LSDBC PROJECT #: 13643

SCOPE:
DESIGN TYPE:

REVISIONS:

| | REQUIRED BY: | DATE |
|---|---|---|
| 1 | STOREFRONT REVISION - REV 1 | 6/10/2014 |

ELITE CONSTRUCTION GROUP
LAKE JACKSON, TX
PHONE: 979-285-0712
NOTE: THESE PRINTS HAVE BEEN REDUCED BY 50 PERCENT. SCALE WILL BE: 50 PERCENT OF WHAT IS NOTED ON PLANS

DATE ISSUED: 04/11/2014
DESIGNED BY: SF
DRAWN BY: HS
CHECKED BY: TBD

**STOREFRONT DETAILS**

DRAWING NUMBER:
1 A08.6